View product details on medias

07.07.2026, 11:41:39 UTC

SCHAEFFLER

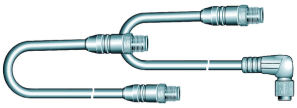

SRMC1-A-180

Measuring instrument rpm

Connecting cable, for measuring heads and electronic evaluation system

Technical information

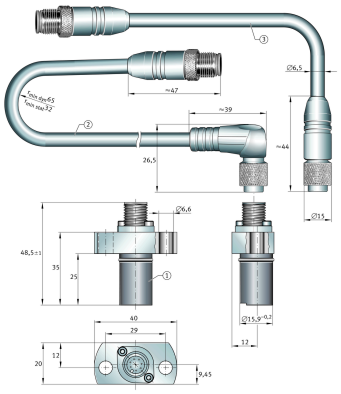

Your current product variant

Cable direction	180°	
Cable length	1 m	
Plug design	A	Angle plug

The data sheet only contains an overview of the technical data of the selected product. Please refer to the additional documentation for this product. For further information, please use the following link on our website: Contact form