View product details on medias

22.04.2026, 13:52:04 UTC

SCHAEFFLER

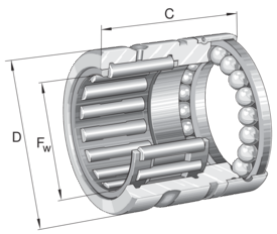

NX10-XL

Needle roller/axial ball bearing

Needle roller/axial ball bearings NX, single direction axial component, for oil lubrication

X-life

Technical information

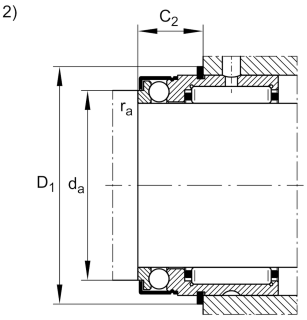

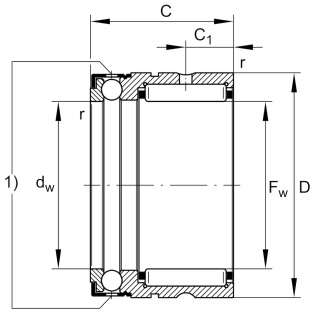

Your current product variant

Sealing	Without
Cage	Standard

Main Dimensions & Performance Data

F_w	10 mm	Bore diameter
D	19 mm	Outside diameter
C	18 mm	Height
C_r	5.000 N	Basic dynamic load rating, radial
C_{0r}	3.700 N	Basic static load rating, radial
C_a	4.600 N	Basic dynamic load rating, axial
C_{0a}	7.200 N	Basic static load rating, axial
C_{ur}	730 N	Fatigue load limit, radial
C_{ua}	330 N	Fatigue load limit, axial
n_G	11.000 1/min	Limiting speed
≈m	24,85 g	Weight

The data sheet only contains an overview of the technical data of the selected product. Please refer to the additional documentation for this product. For further information, please use the following link on our website: Contact form

Mounting dimensions

d_a	14,6 mm	Mounting dimension shaft shoulder
$r_{a\,max}$	0,3 mm	Maximum recess radius
D_1	21,9 mm	Connection diameter snap ring
C_2	10 mm	Connection width with snap ring

Dimensions

C_1	4,7 mm	Distance to lubrication hole
C_2	4,7 mm	Distance to lubrication hole
d_w	10 mm	Bore diameter of shaft washer
r_{min}	0,3 mm	Minimum chamfer dimension

Temperature range

T_{min}	-30 °C	Operating temperature min.
T_{max}	120 °C	Operating temperature max.

Additional information

	IR6X10X10-IS1-XL	Suitable inner rings IR
	WR19, SW19	Snap ring

Characteristics

- Radial load
- Axial load in one direction
- Grease Lubrication
- Oil Lubrication
- Not sealed

The data sheet only contains an overview of the technical data of the selected product. Please refer to the additional documentation for this product. For further information, please use the following link on our website: Contact form