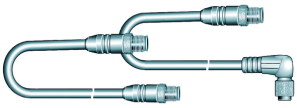

SRMC2-A-90

Measuring instrument rpm

Connecting cable, for measuring heads and electronic evaluation system

Technical information

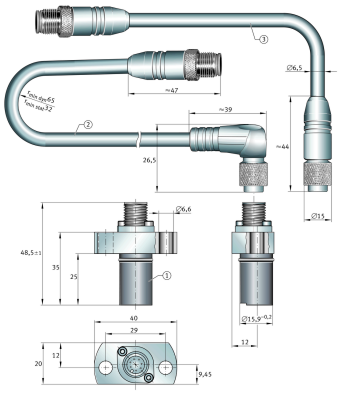

Your current product variant

Cable direction	90°	
Cable length	2 m	
Plug design	A	Angle plug

The data sheet only contains an overview of the technical data of the selected product. Please refer to the additional documentation for this product. For further information, please use the following link on our website: Contact form